TRAFFIC VOLUME FORECAST MODELS WITH HIGH SENSOR DATA UNCERTAINTY

K. Jinakub[1], J Prabnasak[2], P. Ngamdee[3] and S. Boonsiripant[4]*

[1,2] Department of Civil Engineering, Faculty of Engineering, King Mongkut's Institute of Technology Ladkrabang, Bangkok, THAILAND

[3] Traffic Engineer, Mobinary Co., Ltd., THAILAND

[4] Department of Civil Engineering, Faculty of Engineering, Kasetsart University, Bangkok, THAILAND

**Corresponding author; E-mail address: saroch.b@ku.th*

Abstract

1. Introduction

:

2. Related Works

3. Data

3.1 Study corridor

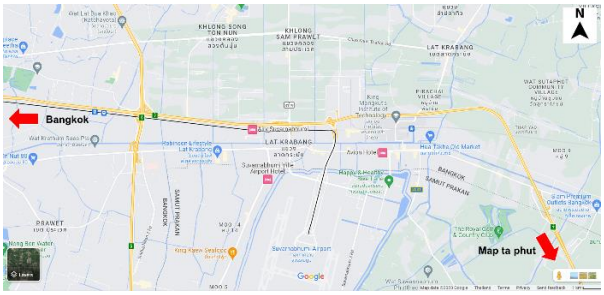

Fig. 1



Fig. 3



Fig. 4

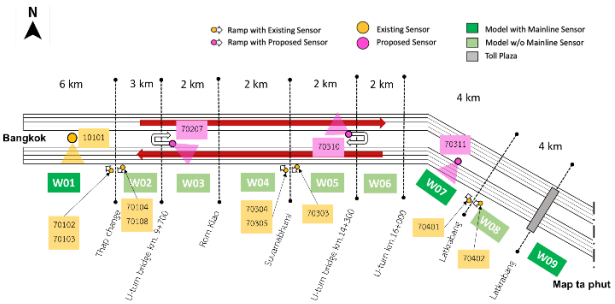

Fig. 2

3.2 Data collection

3.3 Data cleaning and processing

X h_t
C_t σ
f_t i_t
o_t

$$X = \{x_1, x_2, ..., x_T\}$$
$$H = \{h_1, h_2, ..., h_T\}$$
$$Y = \{y_1, y_2, ..., y_T\}$$

$$h_t = H(W_h \cdot [h_{t-1}, x_t] + b_h)$$
$$y_t = W_y h_t + b_y$$

W W_h
b $H(\cdot)$

$$f_t = \sigma(W_f \cdot [h_{t-1}, x_t] + b_f)$$
$$i_t = \sigma(W_i \cdot [h_{t-1}, x] + b_i)$$
$$\tilde{C}_t = \tanh(W_C \cdot [h_{t-1}, x_t] + b_c)$$

$$C_t = f_t \cdot C_{t-1} + i_t \cdot \tilde{C}_t$$

$$o_t = \sigma(W_o \cdot [h_{t-1}, x_t] + b_o)$$
$$h_t = o_t \cdot \tanh(C_t)$$

$\sigma(\cdot)$ $\sigma(\cdot)$
$\tanh(\cdot)$ f
i o
C

$$\sigma(x) = \frac{1}{1+e^{-x}}$$
$$\tanh(x) = \frac{e^x - e^{-x}}{e^x + e^{-x}}$$

4. Model development

4.1 LSTM architecture for traffic volume forecasting

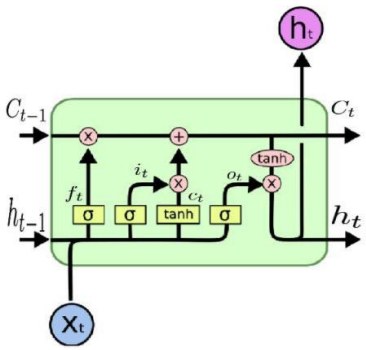

Fig. 5

4.2 Training and test datasets

-
-

4.3 Performance evaluation metrics

4.4 Model Hyperparameter Selection

5. Results

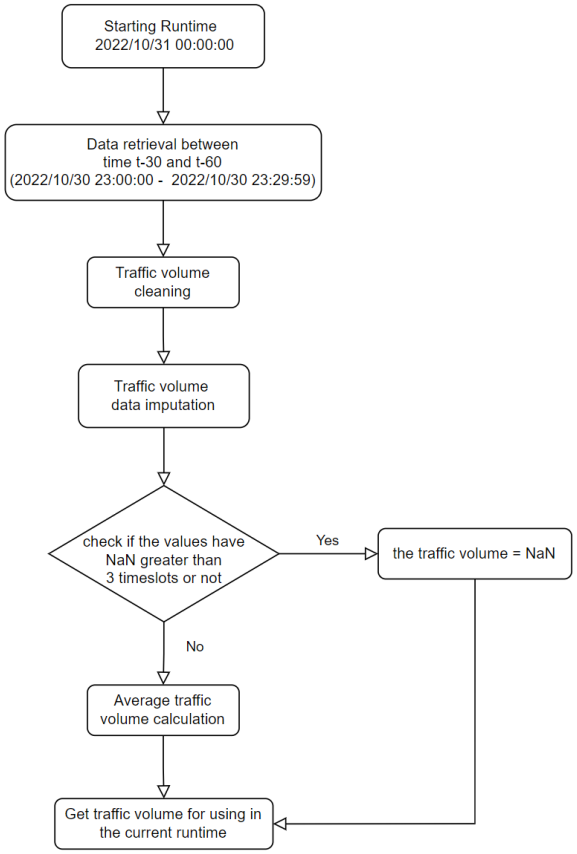

Fig. 6

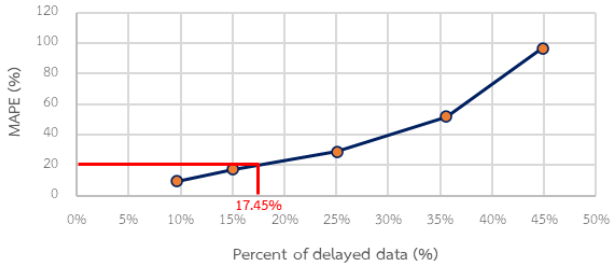

Fig. 9

Table 1

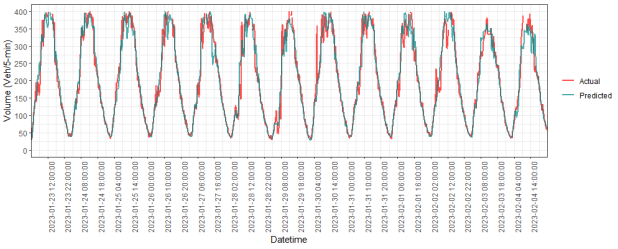

Fig. 7

6. Sensitivity Analysis

7. Discussion and Conclusion

7.1 Model performances

7.2 Sensitivity to data uncertainty

Acknowledgement

References

IEEE Transactions on Intelligent Transportation Systems 17

7.3 Future research

Proceedings 2011 International Conference on Transportation, Mechanical, and Electrical Engineering (TMEE)

Neurocomputing 411

Neurocomputing 318

Transportation Research Part C: Emerging Technologies 118

IEEE Transactions on Fuzzy Systems 28

Journal of Advanced Transportation 2019

2017 IEEE 20th International Conference on Intelligent Transportation Systems (ITSC)

Proceedings of the Korea Information Processing Society Conference

Transportation

Research Record 2673

2017 IEEE 20th International Conference on Intelligent Transportation Systems (ITSC)

ISPRS International Journal of Geo-Information 10