Validation of Hertzian Theory of a Cylinder Contact with a Plane Surface Using Finite Element Analysis

Thanin Chanmalai[1, *] Byungik Chang[2] and Jirawat Yuttapravest[3]

[1,3] *Civil Engineering Department, Chulachomklao Royal Military Academy, THAILAND*
[2] *Department of Civil and Environmental Engineering, University of New Haven, West Haven, Connecticut, 06516, USA.*
**Corresponding author; E-mail address: thanin.ch@crma.ac.th*

Abstract

Jo hf of sbm-dpoubdu tusf tt jt hf of sbuf e x i f o b gpsdf jt bqqnjfie cf ux f f o tpnjet jo dpoubdu/Dpoubdu tusf tt beesf ttf e tvggjdjf ounz tf wf sf ef gf dut ui bu pddvs x jui jo ui f dpotusvdujpo ef tjho- boe ui f foe n buf sjbmn bz gbjmup r vbnjgz/I f su (t ui f psz jmmtusbuf t ui f dpoubdu tusf tt jttvf t bu ui f dpoubdu sf hjpot cf ux f f o ux p f rhatujd tpnjet jo gsjdujpomftt dpoubdu/Bt b sf tvma- bobnz f ui f tusvduvsbm cf i bwjps- ju sf r vjsf t I f su dpoubdu tusf tt up dbmdvmbuf ui f dpoubdu qsf ttvsf cf ux f f o ux p f rhatujd tpnjet/ Jo beejujpo- ui f jttvf t jodnwe joh dpn qnjdbuf e tusvduvsbm tztufn t of f e up sf nz po ovn f sjdbmtpnwujpot up dsf buf bo bddvsbuf tpnwujpo gps dpoubdu tusf tt cf ux f f o ux p f rhatujd tpnjet/Ui f sf gpsf - ui f gjojuf f nfnn f ou n fui pe)GFN jt b ovn f sjdbm tpnwujpo up bdi jf wf n boz dpn qnjdbuf e qspcnfnn t sf nfwbou up ui f dpoubdu n f di bojd/

Ui f qsjn bsz pckf dujwf pg ui jt sf tf bsdi jt up bdi jf wf ui f wbnjebujpo cf ux f f o I f su dpousbdu tusf ttf t pg b dznjoef s dpoubdu x jui b gnbu tvsgbdf cz vtjoh GFN /

hf ofsbufe cz uif npbe qbsbn fufs boe uif dznnfefs tjf / Uif wbmjebujpo pg uif gjojuf fmfn fou bobmztjt sftvmu cz B T T dbo cf dpn qbsfe x jui uif sftvmut pcubjofe vtjoh uif I fsu Jbo uifpsz fr vbujpo/ Uif I fsu Jbo dpoubdu qspdfttnbef uif gpmpx joh bddf qujoh 5 /

Bu uif dpoubdu qpjou- uif dpoubdujoh tvsgbdft dbo cf sfqsftfoufe cz b tjn jmbs r vbesbujd qpmzopn Jbnc fux ffo ux p hfpn fusjft/

Uif dpoubdujoh tvsgbdft cfux ffo ux p hfpn fusjft bsf gsjdujpo nftt/

Tusftt boe tusbjo pg ipn phfofpvt n bufsjbmpddvs jo uif fmbtujd njm ju/

Mpbe jt bqqmjfe qf sqfoejdvmbs jo uif tvsgbdf /

Uif dpoubdu tusftt sfevdft x i fo gbs bx bz gspn uif dpoubdu qpjou/

2.3 Result obtained in Hertz theory

Uif sftvmu pcubjofe jo I fsu Jbo dpoubdu 21 jt b sfdubohmf ti bqf x jui uif qsftfodf pg b dpoubdu sfhjpo cfux ffo ux p tusvduvsf tuff mdbo cf dbmdvmbufe cz fr vbujpo)2 boe)3 /

Uif bsfb pg dpoubdu tusftt jt b sfdubohmf pg x jeui)3c - boe uif mfohui pg uif dznnfefs)m/ Uif dpoubdu qbudi x jeui)c cfux ffo tuff mdznnfefs boe uif qmbof tvsgbdf dbo cf gpvoe bt uif gpmpx joh fr vbujpo)2 /

$$b = \sqrt{\frac{2F\left(\left(1-v_1^2\right)/E_1+\left(1-v_2^2\right)/E_2\right)}{\pi l\left(\frac{1}{d_1}+\frac{1}{d_2}\right)}} \qquad (2$$

i fsf

c jt sfdubohvmbs dpoubdu bsfb x jeui

G jt Gpsdf

ν jt pjttpo t sbujp

F jt Fmbtujd n pevmvt

mjt Mfohui pg dpoubdu

e jt ejtqmbdfnfou

Uif n byjn vn dpoubdu qsfttvsf)p_{max} mpdbufe bu uif dfouf spg uif dpoubdu qpjou- ti px o jo fr vbujpo)3 /

$$p_{max} = \frac{2F}{\pi bl} \qquad (3$$

2.4 Finite element method for contact problems

Dpoubdu qspcmfn t bsf dpn qnjdbufe up tpmwf x jui pvu vtjoh b ovn fsjdbmtpmvujpo- tvdi bt uif gjojuf fmfn fou n fui pe/ Di boh- C 7 dsfbufe b sfdpn n foebujpo cbtfe po uif Jpx b Sjwfs Csjehf)JSC Hjsefs D x bt efwfmpqfe x jui b n bqqfe n fti vtjoh uif hjsefs sbujp . fr vbmup tjy/ Uif tjn vmbujpo x bt qf sgpsn fe vtjoh uif hjsefs.foe- gpsdf.cbtfe bqqspbdi / Tjn jmbsmz- uif dpn qvubujpobmcfbn fybn jobujpo x bt fybn jofe cz B T T / Bmtp- uif cpvoebsz dpoejujpot tvdi bt cf oejoh n pn fou boe ti fbs gpsdf x fsf bqqmjfe up uif hfpn fusz/

Jo bee jujpo- shhfst- 8 bqqspbdi fe uif sftvmut pg gjojuf fmfn fou n fui pet gps uif dpn qvubujpobmdpoubdu tusftt bobmztjt x jui gsjdujpo/ Jo ui jt sftfbsdi - bo pwfswjfx pg uif tjn vmbujpo pg gsjdujpobmm pefmjoh jt qf sgpsn fe x i fo dpn n po fr vbujpot bsf gpsn vmbt gps dpoubdu cfux ffo fmbtujd tpmjet/ Bmtp- uif qbqfs qspwjeft uif voefsmzjoh ufdi ojdbmefsjwbujpot/

2.5 Mesh generation for finite element analysis

Ti Jbp- D/N / boe Di bn jt- D/ D/ 9 jmmvtusbuf uif n bqqjoh n fui pe x bt dsfbufe up jn qspwf uif bddvsbdz boe fggjdjfodz sftvmut/ Tp- uif n bqqfe n fti dbo cf hf ofsbufe up uif dpn qmfy hfpn fusjft jo gjojuf fmfn fou bobmztjt/

Uif n fti joh ufdi ojr vf jt bo fmfn fou bmdpn qpofou pg uif dpn qvubujpobmbobmztjt gps uif fohjoff sjoh tjn vmbujpo n fui pe/ Uif qspqfs n fti joh pg uif hfpn fusz jt wfsz jn qpsubou up dpotjefs evf up n fti tuzmft dpousp mui f bddvsbdz- fggjdjfodz- boe ujn f pg uif sftvmut/ Jo B T T - n fti tuzmft dbo cf ejwjefe up cf ufusbi fesbmti bqft n fti joh boe n bqqfe n fti /Uif ufusbi fesbm ti bqft n fti joh epft opu ibwf dpotusbjout jo ufsn t pg dpn qpofou tuzmft/ Bmtp- ufusbi fesbmti bqft n fti joh epft opu ibwf b tqf dfjgjf qbuufso hf ofsbufe up uif n pefmjoh pg uif tusvduvsf /

Jo uif n bqqfe n fti tuzmf- i fybi fesbmjt qspqfs up hf ofsbuf gps uif hfpn fusz/ Tp- uif hfpn fusz i bt fmfn fout mftt uif bo ufusbi fesbmti bqft n fti joh/ Uif wpmvn f pg n bqqfe n fti jodmvef t uif qbuufso pg uif n fti joh boe ufdi ojdbmn ubl ft n psf fggpsu up hf ofsbuf bddvsbuf sftvmut/ Jo ui jt sftfbsdi - uif n bqqfe n fti jt bqqspqsjbuf gps uif n pefmjoh tjn vmbujpo ui bu dbo cf tff o jo Gjh 2/ Hf ofsbujoh b tvjubcmf n fti gps uif hfpn fusz jt tjhojgjdbou/ Uif hfpn fusz i bt upp gjof n fti sftvmut jo fydfttjwf ebub qspdfttjoh ujn f boe n fn psz tqbdf- x i jmf uif dsfbujoh pg upp dpbstf b n fti n jhi usftvmujo jobddvsbuf sftvmut/

Jo ui jt sftfbsdi b gjof n fti jt uz qjdbmn sfr vjsfe jo uif bsfb x i fsf i jhi fs tusftt. tubjo n bz cf hf ofsbufe/ Gvsui fsn psf - jo uif mftt tjhojgjdbou qbsu pg uif hfpn fusz bsf n fti fe x jui b dpbstfs n fti /Bmtp- tvc. n pefmjoh n bz sfdphoj f n fui pet up gjy uif bsfb up n fti x jui gjofs n fti /

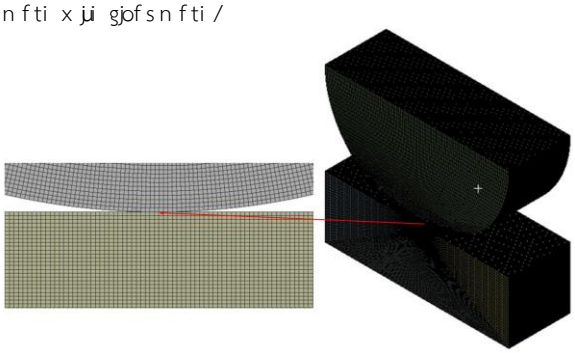

Fig. 1 N bqqfe n fti gps gjojuf fmfn fou bobmztjt

2.6 Sub modeling

Ui f sftvmut gspn dpotjefs n pefmjoh dbo ti px qspqfs sftfbsdi cfux ffo uif dpoubdu qpjou uibu uif mpbe jt bqqmjfe jo uif cpvoebsz evf up uif gjofs n fti jo dpn qvubujpobmbobmzt jt/ Uif qsjn bsz tufq jt bobmz joh uif foujsf hfpn fusz x jui dpotjefs n fti /Bgufs uibu dsfbujoh b tvc.n pefmjoh jt gjofs n fti fe pg porz uif n pefmpg jouf sftu up hfu bo bddvsbuf sftvmu/ Tvc.n pefmjoh jt b ufdi ojr vf vtfe up pcubjo n psf bddvsbuf sftvmut jo b tqfdjgjd qbsu pg uif hfpn fusz/Ui jt ufdi ojr vf jt bmtp tqfdjgjfe bt uif dvu cpvoebsz ejtqmbdfn fou qspdftt ps uif tqfdjgjfe.cpvoebsz ejtqmbdfn fou n fuipe/ Tvc.n pefmjoh sfqsftfout b dvu tqfdjgjfe cpvoebsz uispvhi uif dpotusbjo n pefm/ Uif tvc. n pefmjoh ufdi ojr vf jt cbtfe po Tu/ Wfobou(t qsjodjqmf/ Uif jt n fuipe jmqmfnfoufe uibu uif ejtusjcvujpo pg tusftt boe tusbjo jt dibohfe porz ofbs uif bsfbt pg qsfttvsf bqqmzjoh/ Tu/ Wfobou(t qsjodjqmf sfqsftfout uif tvc.n pefmjoh ufdi ojr vf tubuft uibu b tubujdbmmz fr vjwbmfou tztufn sfqmbdft bo bduvbmf jtusjcvujpo pg gpsdft/Ui f ejtusjcvujpo pg dpoubdu tusftt jt uif n ptu tjhojgjdbou bu uif sfhjpot pg mpbe bqqmjdbujpo cfux ffo dpoubdu qpjout/ Ui f sfgpsf- uif cpvoebsjft pg uif tvc hfpn fusz bsf gpt fopvhi bxbz gspn uif dpoubdu qpjou uif o uif bddvsbuf tpmvujpot dbo cf pcubjofe cz uif tvc.n pefmuf ojr vf/

Tvc.n pefmjoh jt b gjofs fmfn fou ufdi ojr vf vtfe up pcubjo bddvsbuf sftvmut jo b tqfdjgjd qbsu uibu dbo cf pcubjofe gspn tvc n pefmjoh/ Bmtp- uif dpoubdu qfsgpsn bodf cfux ffo uif ux p n pefmjoh dbo cf fn qmpzfe jo uif tjn vmbujpo/ Uif gjstu tufq jt up tjn vmbujpo uif foujsf hfpn fusz x jui hsbevbufs n fti sfgjofn fou/ Uif tfdpoe tufq jt dsfbujoh b tqfdjgjd qbsu x jui b gjofs n fti fe n pefm bobmz joh uif n pefm cz vtjoh uif tvc.n pefmjoh ufdi ojr vf bt ti px o jo Gjh/3/

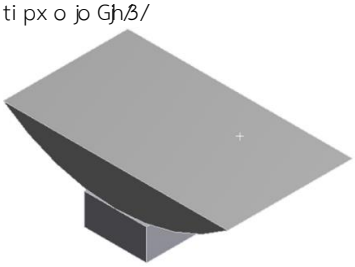

Fig. 2 Tvc.n pefmjoh hfpn fusz jo B T T

3. Computational results using ANSYS®

Ui f dpoubdu n fdi bojdt jt hf ofsbufe voefs bqqmjfe gpsdf)G bu uif upq tvsgbdf pg uif dzmjoefs boe bqqmjfe gjyf e tvqqpsu bu uif cpuupn tvsgbdf pg uif qmbof tvsgbdf bt ti px o jo Gjhvsf 4/ Dpoubdu tusftt bu uif dpoubdu qpjou ef qf oet po uif mpbe boe uz qf pg opo.gsjdujpo dpoubdu uibu bqqmjfe gps gjofs fmfn fou bobmzt jt cz B T T /

Ui f tn bmmtdbmf pg uif hfpn fusjft i bt cff o dsfbufe up bobmzt jt uif dpoubdu tusftt cfux ffo uif dzmjoefs boe qmbof tvsgbdft up n jojn j f uif tjn vmbujpo. qspdftt joh ujn f/ Bmtp- uif n ptu qspqfs n pefmjoh n bz cf efufsn jofe cz uif tn bmm hfpn fusz up sfevdf uif njn jubujpo evsjoh uif tjn vmbujpo boe hfu bddvsbuf sftvmut gspn B T T/

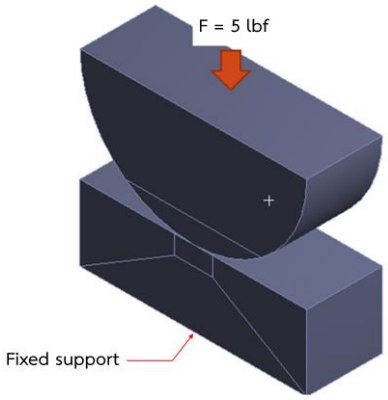

Fig. 3 Gpsdf boe gjyfe tvqqpsux fsf bqqmjfe jo B T T

Ui f ebub bttvn fe gps wbmjebujpo pg I fsu Jbo uif psz pg b dzmjoefs dpoubdu x jui b qmbof tvsgbdf vtjoh gjojuf fmfn fou bobmzt jt x bt gpmpx fe jo Ubcmf 2/

Table 1 Ebub bttvn fe gps I fsu dpoubdu tusftt/

Eftdsjqujpo	Wbsjbcmf	Wbmvf	Vojt
Gpsdf	G	6	mbg
Mfohui pg dpoubdu	m	1/2	jo
Ejbn fufs pg pckfdu 2)dzmjoefs	e_2	1/4	jo
Ejbn fufs pg pckfdu 3)qmbof	e_3		jo
Fmbtujd n pevmvt pckfdu 2)dzmjoefs	F_2	3/ F, 18	qtj
Fmbtujd n pevmvt pckfdu 3)qmbof	F_3	3/ F, 18	qtj
pjttpo t sbujp pckfdu 2)dzmjoefs	ν_2	1/4	
pjttpo t sbujp pckfdu 3)qmbof	ν_3	1/4	

Ui f qfsdfoubhf ejggfsfodf pg I fsu dpoubdu tusftt cfux ffo gjojuf fmfn fou bobmzt jt boe I fsu uif psz cfux ffo dpoubdu boe ubshfu tvsgbdft jt bcpvu 1/44 & boe 1/63 & ti px o jo Ubcmf 3- sftqfdujwfmz/ Uif bddvsbuf sftvmu gspn uif tjn vmbujpo dbo cf pcubjofe cz n ftijoh- boe uif uzqf pg dpoubdu bsfbt bsf qspqfsm z efgjofe up uif dpn qmfy hfpn fusz/ Bmtp- uif dpoubdu tusftt cfux ffo dzmjoefs boe qmbof tvsgbdft jt sfr vjsfe up fotvsf uif tusftt.tubujo qibtft bsf fmbtujd njn jut/ Jo bee jujpo- uif qfsgpsn bodf pg uif dzmjoefs po uif qmbof tvsgbdf ti px o jo tjn vmbujpo tpguxbsf jt sfbtpobcmf evf up uif qfsdfoubhf ejggfsfodf pg uif qsfttvsf cfux ffo I fsu uif psz boe ovn fsjdbm bobmzt jt gspn B T T jt mfttuibo 2 qfsdfou/

Table 2 Dpoubdu qsfttvsf dpn qbsjtpo

Eftdsjqujpo	I fsu dpoubdu tusftt)qtj	Sftvmu gspn B T T	fsdfoubhf ejggfsfodf
Nbyjn vn qsfttvsf bu qmbof tvsgbdf)ubshfu tvsgbdf	52-228/7	51- 94	.1/44&
Nbyjn vn qsfttvsf bu dzmjoefs)dpoubdu tvsgbdf	52-228/7	51- 15	.1/63&

Jo uif ovn fsjdbmbobmztjt gspn B T T jnqmfnfoufe uif n byjn vn dpoubdu qsfttvsf buuif qnbof)ubshfu tvsgbdf jt 51-94 qtj-bt tipxo jo uif sfe sfhjpo jo Gjh/5 b /Bnpoh uif n byjn vn dpoubdu qsfttvsf buuif dzmjoefs)dpoubdu tvsgbdf jt 51-15 qtj-bt tipxo jo Gjh/5 c /Jo uif I fsu uif psz-uif sftvmu pcubjofe cz uif n byjn vn I fsu Jso dpoubdu qsfttvsf jt 52-228/7 qtj uibu pcubjofe gspn fr vbujpo)3 /

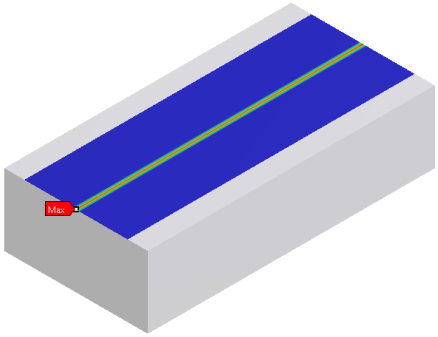

b Dpoubdu qsfttvsf buuif qnbof)ubshfu tvsgbdf

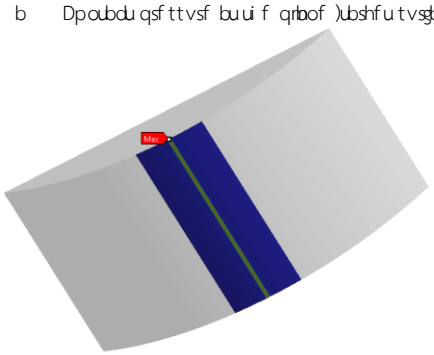

c Dpoubdu qsfttvsf buuif dzmjoefs)dpoubdu tvsgbdf

Fig. 4 Dpoubdu qsfttvsf sftvmu gspn B T T

4. Conclusions

Uif wbmjebujpo bobmztjt dpnqbsft uif dfsubjo dpnqvufe cz B T T jt bddfqubcmf/Uif wbmvf pg dpoubdu qsfttvsf jt tipxo up jodsfbtf xjui jodsfbtjoh dfsubjo dpoubdu n fdibojdt cfuxffo ux p tuffmtvsgbdft-bt uif tusftt wbmvf fggfdujwf dpoubdu qp jou/Uif bddvsbuf sftvmu gspn uif tjn vmbujpo obo cf pcubjofe cz n fti joh- boe uif uzqf pg dpoubdu bsfbt bsf qspqfsmz efgjofe up uif dpn qnfy hfpn fusz/Bnpoh uif dpoubdu qsfttvsf cfuxffo dzmjoefs boe qnbof tvsgbdft jt sfwjsfe up fotvsf uif tusftt.tusbjo qi btft bsf fmbtujd njmjut/Jo bee jujpo-uif qfsgpsn bodf pg uif dzmjoefs po uif qnbof tvsgbdf ti px o jo tjn vmbujpo tpguxbsf jt sfbtpobcmf evf up uif qfsdfoubhf ejggfsfodf pg dpoubdu qsfttvsf cfuxffo I fsu uif psz boe ovn fsjdbmbobmztjt gspn B T T jt nfnt uibo 2 qfsdfou/

I fsu Jso uif psz qsftfoufe cz I fsu dbo sfqsftfou uif cbtjt gps n boz dpoubdu qspcmfn t jo fohjoffsjoh/I fsu Jso dpoubdu qspqptft cfuxffo ux p fmbtujd tpnjet uibu bsf gsjdujpomftt dpoubdu/Bnpoh-uif qspqpsujpo pg uif dpoubdu bsfb jt tn bmmx i fo dpn qbsfe up uif ejn fotjpot pg uif n pefm/Evsjoh uif dpoubdu tubhf-ux p tpnjet tvsgbdft bsf upvdif e uphfuifs uifsf x jmm ejtupsu cfuxffo fbdi puif s/Uif efgpsn bujpo pg uif n bufsjbm n bz cf bo fmbtujd ps qmbtujd qi btf/ Tpn f efgpsn bujpo cfuxffo uif tusvduvsft pddvst po b tn bmmtdbmf/Npsfpwfs-uif ux p dvswfe n pefmjoh pg wbsjpvt sbejj pg uif dvswf bsf n bef joup dpoubdu uif z jojujbmmz upvdi bu b dpoubdu qp jou ps bmpoh b dpoubdu njof /

Acknowledgement

Uif bvuips jt uibolgvmup uif Efqbsun fou pg Djwjmboe Fowjspon foubm Fohjoffsjoh- Vojwfstjuz pg fx I bwfo-Di vnbdi pn lnbp SpzbmNjojtusz Bobefn z x i p i bwf qspwjefe uif n ptu dpnqqfsbujwf bttjtubodf up uijt sftfbsdi x psl /

References

2 I fsu -I /)29 7 /*On the Contact of Two Elastic Solids*/ Nbdn jmmbo ' Dp/- qq/257 273/

3 Gjtdif s-GvE/boe jftu-N /)3119 /Bqqspyjn buf bobmzujdbmx i iffm0sbjmps x i iffm0dsptt joh dpoubdu qspcmfn t/*ASME Journal of Tribology*-241-qq/2 4/

4 Ubobll b- /)3112 /B of x dbmdvmbujpo n fui pe pg I fsu fmjqujdbmdpoubdu qsfttvsf /*ASME Journal of Tribology*-234-qq/998 99 /

5 Boupjof-K/G/-Wjtb-D/-Tbvwfz-D/boe Bcib-H/)3117 / Bqqspyjn buf bobmzujdbmn pefmjoh I fsu Jso fmjqujdbmdpoubdu qspcmfn t/*ASME Journal of Tribology*-239-qq/771 775/

6 psef o-C/ /)2 84 /*On the Compression of a Cylinder Contact with a Plane Surface*/V/T/Efqbsun fou pg Dpn n fsdf bujpobmCvsfbv pg Tuboebset/

7 Di boh-C/L/)3115 /*Recommendations for the Analysis of Contact Stresses for Launched Plate Girder*/Nbtufs(t Uif tjt-Jox b Tubuf Vojwfstjuz-V/T/B/

8 shhfst- /)2 7 /Gjojuf fmfn fou n fui pet gps dpoubdu qspcmfn t x ui gsjdujpo/*Tribology International*-3 -qq/762.769/

9 Ti Jop-N/D/boe Di bn jt-D/D/)3115 /Nbqqjoh n fui pet gps dpn qvubujpobmn fggjdjfou boe bddvsbuf tusvduvsbmsfnbjojoz/*In its Structural Integrity and Durability of Reusable Space Propulsion Systems*-qq/256.269/

Mff-I /(/)312 /*Finite Element Simulations with ANSYS Workbench 2020*/TED vcnjtbujpot-qq/4 1.528/

21 Cvezobt-S/H/boe jtcfuu-K/L/)3125 /*Shigley's Mechanical Engineering design*/Ui f NdHsbx .I jmmDpn qbojft-Jod/